LAB 7: OP AMPS I

UC Berkeley Donald A. Glaser Instrumentation Laboratory

GENERAL GUIDELINES

- **You should complete the prelab questions before beginning benchwork.** Information required to answer the prelab questions can be found in the background material at the beginning of the lab, from lecture, in the stated references, and on the web.

- **Please ask questions of the GSIs or professor(s)** at any time during the course!

- Wikipedia has many useful and informative articles. You are strongly encouraged to use Wikipedia and other online resources to better understand any material.

- **Problems with this icon need to be checked off by GSIs.**

- **Problems with this icon indicate that you should take a picture of the circuit built for the problem and include it in your report. Include your student ID, with name clearly visible, in the photo.**

- **Problems with this icon indicate that you should take a screenshot of the WaveForms oscilloscope.**

- **Important Safety Habits**
  - Before stopping for the day or taking a break, make sure you power down all equipment.
  - When possible, use the switches for the power supplies to power down the circuit when changing the wiring. It is easy to accidentally short wires and damage your equipment or electronic components.
  - Never place food or drink next to any apparatus. Accidental spills can damage or destroy the equipment and your experiment.

1. LEARNING GOALS

(1) Understand basic concepts of op amps.

(2) Learn the **op-amp golden rules** (and their limitations).

(3) Build fun and useful op-amp circuits!

2. LAB BACKGROUND READING

"Student Manual for Art of Electronics" , Hayes & Horowitz	Chapter 4
"The Art of Electronics", Horowitz & Hill, 3rd edition	Chapter 4

TABLE 1. Additional background references.

2.1. **Integrated Circuit Amplifiers.** As we have seen in the previous JFET labs, amplifiers constructed from discrete transistors are useful but have many undesirable features:

- high-gain amplifiers are difficult to design;
- the amplifier gain is difficult to predict because it depends on the transistor transconductance, which varies between transistors;
- the gain can depend on temperature;
- the amplifier output impedance is not necessarily low;
- and discrete transistors lack protection circuitry and are easy to burn out.[1]

These problems can be eliminated by carefully designing complicated circuits using multiple stages of matched transistors. Such complete amplifier circuits, fabricated on a single piece of silicon, come prepackaged as *integrated circuits* (ICs). Many types of integrated circuit amplifiers are available, but the most useful type is the *operational amplifier* (op amp).

2.2. **Feedback.** Op amps circuits almost always use *feedback*: feeding some of its output back into its input. In fact, feedback is the most important principle of modern analog circuit design. There are two types of feedback:

- *Positive feedback*, where the output is used to enhance the input signal and increase the gain. Positive feedback is used in oscillator circuits and to add *hysteresis* in comparators.
- *Negative feedback*, where the output is used to diminish the input signal and decrease the gain. This seems foolish at first — after all, why intentionally diminish the gain of an amplifier? Indeed, negative feedback was greeted with incredulity when first applied to electronics by Harold Black and others in the 1920s. Harold had the last laugh, though, and we shall see that negative feedback dramatically improves the properties of amplifiers.

2.3. **Operational amplifiers.** Op amps are high-gain differential amplifiers. Like the discrete differential amplifiers that you built in Lab 6, op amps have two inputs V_+ and V_-, and one output, V_{out}. In schematic diagrams, op amps are drawn with the symbol in Fig. 1. The output and inputs satisfy the relationship

$$V_{\text{out}} = G_0(V_+ - V_-) \tag{1}$$

where G_0 is a large constant called the *open-loop gain*.

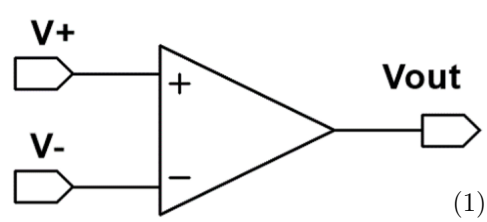

FIGURE 1. Op amp circuit element.

[1] Of course, this is a much bigger problem in our lab environment than it would be in a production environment, but it's difficult to completely remove this kind of risk.

In general, the differential open-loop gain is a function of frequency $G_0(\omega)$. However, for this lab we will assume it is large but will not discuss the frequency dependence in detail[2]. Unlike discrete differential amplifiers, op amps have very high open-loop differential gain at DC (over 10^7 in some cases), as well as negligible common mode gain, extremely high input impedance, very low output impedance, little to no temperature dependence, and piece-to-piece variation that is negligible for most applications. Furthermore, they are insensitive to power supply fluctuations, are difficult to burn out, cheap, and available in countless varieties; one vendor, Digikey, sells over 22,000 varieties!

The op amp must also be connected to power; in our case, to both $+12\,\mathrm{V}$ and $-12\,\mathrm{V}$. These supplies must equal or, more typically, exceed the desired range for V_{out}. **The power leads are typically not drawn in circuit diagrams, but make no mistake — they must be powered to work properly!**

As op amps are almost always superior to discrete amplifiers, modern analog circuit designs use them almost exclusively. Real op amps are so close to being ideal amplifiers (i.e. infinite gain at DC, infinite input impedance, zero output impedance, etc.) that it is often acceptable to treat them as being truly ideal. This assumption greatly simplifies circuit design. In many of the exercises for this lab, we will assume that our op amps are truly ideal; Lab 9 will investigate some of the limitations with actual devices. When used with negative feedback, ideal op amp circuits can be designed and/or analyzed by following two simple rules: the *op amp golden rules*.

2.4. Op Amp Golden Rules.

(1) **The inputs draw no current**: The LF356 op amps used in this lab have an input impedance at DC of $R_{\mathrm{in}} \sim 10^{12}\,\Omega$. So, at DC, this approximation of no current draw is nearly perfect. The input also has a capacitance of $C_{\mathrm{in}} \sim 3\,\mathrm{pF}$, which will dominate the input impedance for AC signals. At a frequency of $1\,\mathrm{MHz}$, this impedance is $Z_{\mathrm{in}} \sim 53\,\mathrm{k}\Omega$ and thus cannot necessarily be neglected. However, for most frequencies and impedances encountered in this lab, it is safe to assume that the inputs draw no current.

(2) **The output attempts to do whatever is necessary to make the voltage difference between the two inputs zero**: This approximation arises from assuming that the gain of the op amp is essentially infinite. The DC gain of the LF356 operating from a $\pm 12\,\mathrm{V}$ supply is $G_0 \sim 2 \times 10^5$ ($106\,\mathrm{dB}$). For low-frequency applications at low closed-loop gain, this golden rule will be satisfied to a high degree of accuracy. However, this will not necessarily be the case at high-frequency and/or high closed-loop gain.

These golden rules arise from ideal limiting cases which op amps typically approach at DC. The use of the golden rules is best explained by example. In what follows, we will describe the circuits in terms of the golden rules and discuss a few potential differences from ideal behavior.

2.5. Op Amp Follower.

The simplest op amp circuit is the follower as shown in Fig. 2. This circuit has the particularly useful property of having a very high input impedance and very low output impedance. Therefore, it can be used to drive low impedance loads from high impedance circuits. It is similar to the source follower we built with a JFET in the previous lab but will have a gain of exactly one and no voltage offset. The first golden rule, applied to this circuit, indicates that the input impedance is infinite. The second rule is more interesting; since V_- is wired to V_{out}, these two voltages must be equal. Likewise, $V_+ = V_{\mathrm{in}}$. The only way that the two inputs can be at the same voltage, $V_- = V_+$ is for $V_{\mathrm{out}} = V_{\mathrm{in}}$. Consequently, the op amp behaves like a perfect voltage follower.

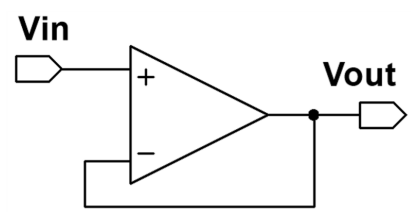

FIGURE 2. Op amp follower.

Understanding how the second rule is actually satisfied is particularly easy for the follower. If the output V_{out} were to deviate downwards, $V_+ - V_- = V_{\mathrm{in}} - V_{\mathrm{out}} > 0$, the amplifier would drive its output V_{out} higher, reestablishing $V_{\mathrm{out}} = V_{\mathrm{in}}$. If the output V_{out} were to deviate upwards, $V_+ - V_- < 0$, and the amplifier would drive its output lower, once again reestablishing $V_{\mathrm{out}} = V_{\mathrm{in}}$. When the input voltage V_{in} changes, $V_{\mathrm{out}} = V_{\mathrm{in}}$ is maintained.

One might be bothered by a seeming inconsistency between the second golden rule $V_+ - V_- = V_{\mathrm{in}} - V_{\mathrm{out}} = 0$ in equilibrium, and the fact that $V_{\mathrm{out}} = G_0(V_+ - V_-)$. This is reconciled by realizing that the golden rule is an approximation that only holds precisely in the limit of infinite differential gain.

[2] That's for later labs :)

Specifically, for the op amp follower, we have

$$\begin{aligned} G_0(V_+ - V_-) &= V_{\text{out}} \\ G_0(V_{\text{in}} - V_{\text{out}}) &= V_{\text{out}} \end{aligned} \tag{2}$$

Solving for V_{out} we find

$$V_{\text{out}} = \frac{G_0}{G_0 + 1} V_{\text{in}} \tag{3}$$

Therefore, for a real amplifier with finite open-loop gain, there will be a small error voltage between the inputs and the magnitude of the output will be slightly less than the input. However, for the LF356 with $G_0(\omega = 0) \sim 6 \times 10^5$, the difference from the ideal behavior described by the golden rules is so small as to be negligible for most applications and we can treat the follower as being perfect.

2.6. **Op Amp Inverting Amplifiers.** Another simple op amp circuit is the inverting amplifier as shown in Fig. 3. Here the non-inverting input V_+ is tied to ground. Since the 2nd golden rule insists that $V_- = V_+$, the negative input V_- must also be at ground. As this grounding is enforced by the op amp itself rather than by any physical connection to ground, it is often called a *virtual ground*. The current flowing towards the V_- junction is then easy to calculate: $I_- = V_{\text{in}}/R_1$. Since the first golden rule asserts that no current flows into the inputs, all of this current I_- must flow out through the resistor R_2 . Remembering that the V_- end of R_2 is at virtual ground, the output of the op amp must be at $V_{\text{out}} = -R_2 I_- = -\frac{R_2}{R_1} V_{\text{in}}$. Thus, the closed loop gain of the circuit is $\frac{V_{\text{out}}}{V_{\text{in}}} = \frac{-R_2}{R_1}$, where the minus sign indicates that the output will be inverted relative to the input.

Let's see if we can derive a similar result using the open-loop gain, instead of the second golden rule (as we did for the follower above). For finite open loop op amp gain G_0 we must solve three equations for three unknowns: V_-, I_-, and V_{out}. First, we have our

$$G_0(V_+ - V_-) = V_{\text{out}} \quad \overset{V_+=0}{\Longrightarrow} \quad -G_0 V_- = V_{\text{out}} \tag{4}$$

where we've taken into account that V_+ is explicitly grounded for the inverted op amp geometry. Additionally, we know that

$$V_{\text{in}} - V_{\text{out}} = I_-(R_1 + R_2) \tag{5}$$

$$V_{\text{in}} - I_- R_1 = V_- \tag{6}$$

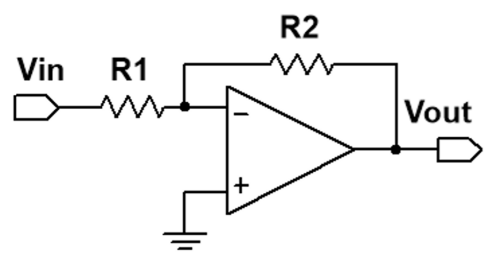

FIGURE 3. Op amp inverting amplifier.

Solving these three equations for V_{out} we find that

$$V_{\text{out}} = \frac{-R_2}{R_1} \frac{G_0}{1 + \frac{R_2}{R_1} + G_0} V_{\text{in}} \tag{7}$$

As long as $G_0 \gg 1 + \frac{R_2}{R_1}$, the infinite gain approximation that we derived using the golden rules is valid.

2.7. **Non-inverting Amplifier.** Another common application of op amps is the non-inverting amplifier shown in Fig. 4. Here, the signal goes directly into the V_+ non-inverting input. This amplifier has the benefit of having an extremely high input impedance because the V_+ input of the op amp to a very good approximation at low frequencies draws no current (i.e. the first golden rule). This is the preferred configuration to use when you are amplifying a voltage signal with a very high output impedance.[3]

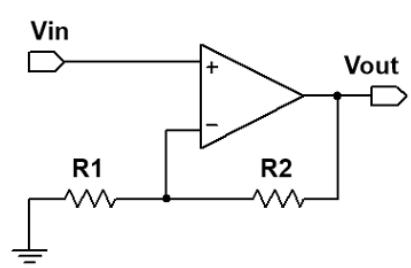

FIGURE 4. Op amp non-inverting amplifier.

Applying the 2nd golden rule, $V_- = V_+ = V_{\text{in}}$, we can calculate the current that flows through both resistors as

$$I = \frac{1}{R_1} V_{\text{in}} \tag{8}$$

[3]For example, some light, strain, pH, humidity, or acceleration sensors would use this configuration.

and thus

$$\begin{aligned} V_{\text{out}} &= I(R_1 + R_2) \\ &= \frac{V_{\text{in}}}{R_1}(R_1 + R_2) \\ &= \left(1 + \frac{R_2}{R_1}\right) V_{\text{in}} \end{aligned} \tag{9}$$

So the closed loop gain is $G_{\text{c}} = 1 + \frac{R_2}{R_1}$. One feature (or bug) of the non-inverting configuration is that, unlike the inverting configuration, the gain cannot be less than 1. Thus, if one wants to make a simple op amp-based active filter by replacing either R_2 and R_1 with frequency-dependent impedances, one should usually use equations for the inverting geometry.

2.8. **Golden Rule Limitations.** As shown with our three cases, the golden rules apply only to circuits which satisfy the following requirements:

- the circuit must use negative feedback;
- there must be feedback at DC;
- the ideal output voltage V_{out} predicted by the golden rules cannot exceed the power supply voltages ($\pm 12\,\text{V}$ in our case). In fact, many op amps, including the LF356, are not *rail-to-rail*: they cannot output voltages closer to the power supply voltages than a volt or two. For the LF356, this "headroom" is about 1.5 V.
- and the ideal output current I_{out} predicted by the golden rules cannot exceed the op amp current constraints, which is around $\pm 25\,\text{mA}$. For example, with $\pm 12\,\text{V}$ power supplies and a $300\,\Omega$ load impedance, the maximum/minimum output voltage of the LF356 is approximately $\pm 25\,\text{mA} \cdot 300\,\Omega = 7.5\,\text{V}$.

For the last two limitations, the relevant limitation is whichever is reached first. You may have noticed this when building the radio: with the scope on the op amp output, the output voltage maxes out near 10 V, but with the speaker, clipping occurs at a much lower voltage. Because the speaker has a much lower input impedance than the scope (which you found in Lab 1 to be around $1\,\text{M}\Omega$), the current limitation is encountered first with the speaker, but the voltage limitation with the scope.

Several circuits in this and the following labs will illustrate all four of these limitations.

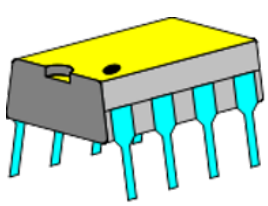

FIGURE 5. The LF356 op amp.

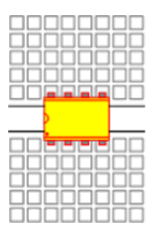

FIGURE 6. DIP breadboard setup.

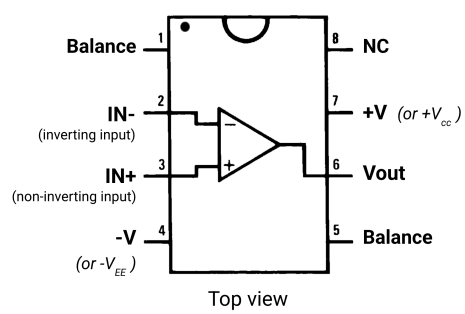

FIGURE 7. Standard op amp pin-outs.

2.9. **Packaging and Schematic Conventions.** Op amps come in several different standard packages. The op amps used in this lab come in a package called an 8 pin DIP (dual inline package), shown in Fig. 5. DIP pins are numbered sequentially in the counterclockwise direction (Fig. 7). Pin 1 is at the end with the half-moon notch cutout; looking at the IC from the top (leads pointing away from you), **pin 1 is the first pin counterclockwise from the cutout.** This pin is sometimes indicated by a **small dot**.

Note that the breadboard channel is designed so that the op amp neatly straddles the channel as shown in Fig. 6. By convention, a DIP is always oriented so that the cut out is on the left side (or the upper side, if the IC is vertical.) Many of you will be tempted to ignore this convention, and you will get away with it for circuits that have only one or two op amps. However, by the time you build circuits with ten op amps, randomly orienting the op amps will lead to

much confusion. Please get in the habit of orienting them properly from the beginning. Orienting the DIPs properly will also make it much faster for the GSIs to help you with debugging.

The pins on most single op amps, including the LF356, are connected as shown in Fig. 7. N/C stands for "no connection" and should be left floating, i.e. unconnected to any other components. The "Balance" (sometimes "BAL") pins are used to eliminate output voltage offsets caused by improper matching of the input transistors. These pins will not be used in this lab and should also be left floating (not connected). In general, you need to wire these inputs: the inverting input IN- on pin 2, the non-inverting input IN+ on pin 3, the output V_{out} on pin 6, and the two supply power pins: $-V$ connected to $-12\,\text{V}$ on pin 4, and $+V$ connected to $+12\,\text{V}$ on pin 7.

The op amp power supply leads +V and −V must be connected to the $+12\,\text{V}$ and $-12\,\text{V}$ power supplies to turn the op amp "ON"! These supply pins are also referred to as $+V_{\text{CC}}$ (+V) and $-V_{\text{EE}}$ (−V) on some data sheets. *These op-amp power supplies are often not drawn on circuit schematics.* Also: never confuse the power supply polarities. One of the few ways you can burn out the LF356 is to power −V and +V backwards.

Op amp circuits are prone to parasitic oscillations. Always use power supply decoupling capacitors placed close to the op amps from each of the power supply leads to ground. $0.1\,\mu\text{F}$ capacitors are a usually a good choice.

2.10. **Pleas from your friendly neighborhood GSIs.** If your op amp circuit does not work, **please check the following before you ask for help**. You will not be helped without first checking the following.

- Have you added your **decoupling capacitors**?
- Have you **oriented** your op amp correctly?
- Have you **powered your op amp with the correct power supplies**?
- Have you **turned your power supplies on**?

3. PRE-LAB QUESTIONS

P7.1) What are the op amp golden rules? Under what conditions do these rules approximate actual op amp performance? Or equivalently, under what scenarios are the golden rules invalid?

P7.2) How does an LF356 deviate from ideal when used as a follower?

P7.3) What is the input impedance of an inverting amplifier? Design an **inverting amplifier** with a gain of ten and an input impedance of $1\,\mathrm{k}\Omega$.

P7.4) Non-inverting amplifiers:

(a) Using the op amp golden rules, what is the estimated gain of the non-inverting amplifier used in L7.3 (Fig. 9)?

(b) Design a **non-inverting amplifier** with a gain of ten.

P7.5) You've built an op amp circuit in this (or following) labs, and for some reason your circuit doesn't work. What four things should you check before anything else?

4. LAB EXERCISES

Op amps are prone to oscillations. Please properly decouple the power supplies of any circuit incorporating op amps with 0.1 µF capacitors between the supplies and ground. You will not be helped without proper decoupling capacitors installed!

Problem L7.1 - Op Amp Follower. Construct the voltage follower shown in Fig. 8.

(a) **Set** $R = 0\,\Omega$. By looking at V_{out}, **investigate** the follower's performance for a variety of input signals of different shapes, frequencies, and amplitudes. **Input** a 1 MHz square wave and **observe** what happens to the output as the amplitude is increased from 0.1 V to 5 V. The gain of the op amp and the closed-loop gain of the follower are actually functions of frequency and output amplitude; this will be studied in detail in future labs.

(b) **Set** $R = 5.6\,\text{M}\Omega$ and measure the gain and phase of the transfer function with a 1 V amplitude sine wave over a frequency range of 100 Hz to 100 kHz. The frequency dependence is due to the low-pass filter created by the series resistor and the input capacitance of the op amp input. From your network analysis, find the **frequency** of the 3 dB point. What is the **phase** at this frequency?

(c) Modeling the series resistor and input capacitance as a low pass filter, use your results from (b) to **solve** for the value of the input capacitance. **Compare** your result with the specified value of $C_{\text{in}} = 3\,\text{pF}$.[4] **Compare** the magnitude of the input impedance at the 3 dB point with the specified DC resistance of the input $R_{\text{in}} \sim 1\,\text{T}\Omega$. What does this imply about the **range of validity for the first golden rule** (inputs draw no current)? Is the first golden rule valid in this limit, or does it break down?

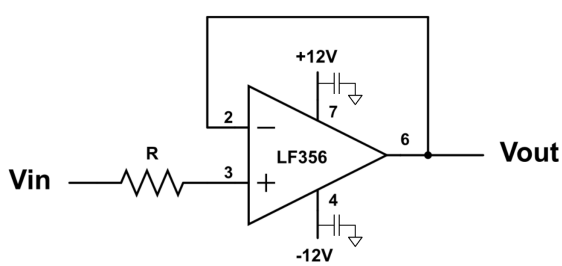

FIGURE 8. Op amp follower circuit, including decoupling capacitors installed at the ±12 V supplies. Keep de-coupling supplies installed at the op-amp supply leads. In future schematics, the op-amp power supplies and decoupling capacitors are implicit.

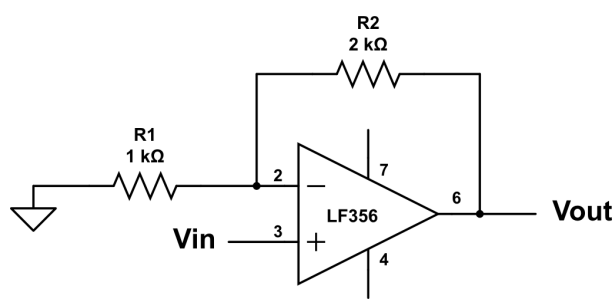

FIGURE 9. Non-inverting amplifier circuit. Note that the small downward pointing triangle on the left side of the diagram is another symbol for ground.

Problem L7.2 - Op Amp Inverting Amplifier. **Build** the inverting amplifier that you designed in P7.3.

(a) Carefully **measure** the gain of your amplifier for a 0.1 V amplitude, 1 kHz sine wave. Does the gain **agree precisely** with the design value?

(b) Now carefully measure the resistor values with your DMM and take into account the 50 Ω output impedance of the function generator by **measuring** the input signal rather than just assuming it is 0.1 V. Using the measured resistance values, how does the measured gain **compare** to the design gain?

(c) Using a 100 mV amplitude wave, **determine** the 3 dB frequency of the output. As before, the *bandwidth* (BW) of the amplifier is defined by the 3 dB frequency.

[4] If your value is larger, it could be because of parasitic capacitance in your wiring or the breadboard.

(d) **Change** the feedback resistor to make the closed loop gain $G_c = 100$. Using a 10 mV sine input drive, **determine** the 3 dB frequency of the output. The open-loop gain of the op amp is actually a function of frequency. The product of the closed-loop gain and the bandwidth is a fixed property of the op amp, called the *gain-bandwidth (GBW) product*. Use your results from (b) and (c) to **determine the GBW product** for the LF356. The finite GBW is the most significant deviation from ideal behavior for op amps and must be taken into account when designing high-frequency and/or high-gain circuits. For example, if you wanted to build an amplifier with a gain of 100 at a frequency of 100 kHz, a single LF356 would not be sufficient.

Problem L7.3 - Op Amp Non-Inverting Amplifier.

(a) **Build** the non-inverting amplifier shown in Fig. 9 and **measure** its gain for a 0.1 V amplitude, 1 kHz sine wave. How does its gain **compare** with the design gain calculated in P7.4a?

(b) Now carefully **measure** the resistor values and **recalculate** the expected gain. How does this gain compare with the observed gain?

Problem L7.4 - Calculating the Output Impedance of an Inverting Amplifier. We presented many ways to measure the Thevenin equivalent circuit parameters way back in Lab 1. One way that is usually pretty easy is to hook up the black box to an external voltage source and measure the current for a few different voltage settings as shown in Fig. 10a.

Let's use this basic technique to calculate the Thevenin output impedance of the inverting amplifier geometry as shown in Fig. 10a. Please note that we connected V_{in} to ground to simplify the calculation (without changing its generality). The consequence of this was that V_{th} is now zero, so that we only need to measure I for a single V_x to find the output impedance, Z_{out}. Specifically, $Z_{\text{out}} = V_x/I$.

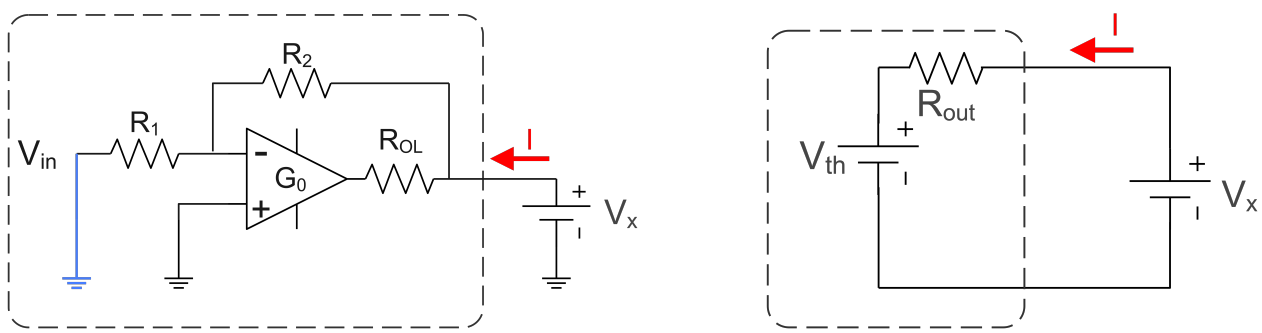

(a) The inverting op amp amplifier.

(b) The Thévenin equivalent circuit.

FIGURE 10. Measurement of the Thévenin parameters of an inverting op amp amplifier with a voltage excitation.

(a) **Calculate** the total current I flowing into the inverting amplifier for an excitation V_x assuming the op amp has a finite open-loop gain, G_0 and a finite open-loop output impedance, R_{OL}. The fact that a physical op amp has an open-loop output impedance should be somewhat expected (nothing is truly an ideal voltage source, though we get pretty close). However, this is an added complexity that wasn't included in our derivations of the closed-loop gain of the inverting amplifier. Just to set the scale, R_{OL} for the LF356 is around 150 Ω. Please note that I splits into two currents: a current through the resistors R_1 and R_2, and a current into the output of the op amp.

(b) **Simplify** your calculated R_{out} in the limit that $G_0R_1/R_{\text{OL}} \gg 1$ and $G_0R_1/(R_1 + R_2) \gg 1$ ... basically, just drop all terms except those that have G_0 dependence[5].

(c) How does the closed-loop impedance R_{out} **scale** with G_0? Is it much smaller than R_{OL}?

[5] Remember that $G_0 \sim 6 \times 10^5$ for our LF356: the gain may not be infinite, but it is really, really big!

(d) **Calculate** the expected R_{out} for the amplifier with $R_1 = 4.7\,\text{k}\Omega$, $R_2 = 47\,\text{k}\Omega$, $R_{\text{OL}} = 150\,\Omega$, and $G_0 = 6 \times 10^5$. Your impedance should be really, really small!

You've now explicitly calculated one of the huge benefits of using high-gain op amps in negative feedback geometries, and you can make amplifiers and voltage regulators with almost negligibly small output impedance.

Problem L7.5 - Measuring the Output Impedance of an Inverting Amplifier.

FIGURE 11. A degraded inverting amplifier circuit, which can be used to measure an effective output impedance.

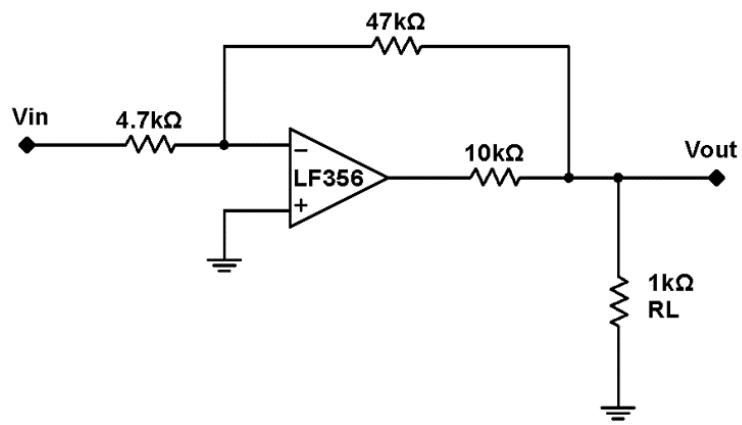

(a) Build the inverting amplifier in Fig. 11. Notice this amplifier has an additional $10\,\text{k}\Omega$ output resistor connected to the output of the op amp **but it is still inside the feedback loop**. Effectively, we are simply degrading the effective output impedance of the op amp from around $150\,\Omega$ to $10.15\,\text{k}\Omega$. We do this so that we can hopefully measure the output impedance!

(b) If the $10\,\text{k}\Omega$ resistor was outside of the feedback loop, what would be the **output impedance** of the amplifier?

(c) Using results from the previous problem, what is the **expected** output impedance of the original inverting amplifier from Fig. 11? This is the same calculation as above except for two modifications:

- R_{OL} is much bigger.
- The open loop gain G_0 varies with frequency. At DC, it's around 2×10^5, but at 1 kHz it's substantially lower at around 6×10^3.

(d) With R_L removed, **measure** V_{out} for a 0.1V amplitude 1kHz sine wave excitation on V_{in}. Does the gain **match** your expectations?

(e) Now add back R_{L} and **measure** V_{out}. Ensure that the output signal is not distorted/saturated. If you observe any clipping of the output signal, try reducing the Wavegen input. From these two measurements, you can estimate the output impedance, R_{out}.[6] **What** is your measurement of R_{out}? Does it **qualitatively match** your calculation?

(f) Now let's look to see when the amplifier stops being linear and starts to saturate. With R_{L} removed, for what **amplitude excitation** do you start to see **saturation effects**? Can you qualitatively **explain** what's happening?[7]

(g) Now do the same saturation test with R_{L} in place. Did the input voltage at which saturation occurs **decrease**? **Why?** Feedback is incredibly powerful, but it cannot overcome fundamental component limitations.

[6] If the change in output voltage is too small to accurately measure, try using a smaller resistor for R_L.

[7] Hint: think about limits on V_{out}. Feel free to look for these saturation effects using the triangle wave instead of the sine wave... it may be slightly easier to see.

Problem L7.6 - Differential Amplifier.

(a) Finish the design of the differential gain-equals-ten differential amplifier shown in Fig. 12. Make sure that your common mode gain of your circuit is zero, even if the voltage sources connected to the + and - inputs have non-zero output impedance (that are the same value). **Measure** the resistances that you will use with your DMM, and **build** the circuit.

(b) **Measure the common mode gain** by connecting the signal generator to both V_A and V_B.

(c) **Measure the differential gain** by connection V_A and V_B to separate signal generator channels that are 180° out of phase. Don't forget to **set** your Wavegen to **Synchronized**.

(d) Are your gains consistent with expectations given measured resistance variation?

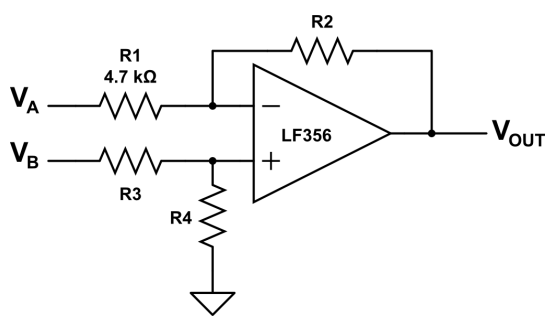

FIGURE 12. Op amp-based differential amplifier circuit.

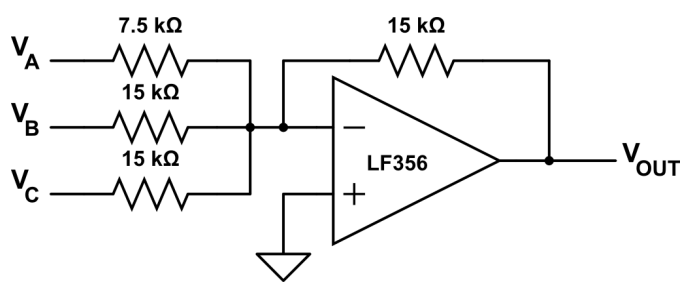

FIGURE 13. Voltage summing amplifier circuit.

Problem L7.7 - Summing Amplifier.

(a) **Study** the circuit shown in Fig. 13. Using the op amp golden rules, what is V_{out} in terms of V_{A}, V_{B}, and V_{C}? This is called a *summing amplifier*.

(b) **Construct** the summing amplifier in Fig. 13, and **verify** that it obeys the relationship found in (a) by **measuring** V_{out} with the ADS for these two input scenarios:

(i) $V_{\text{A}} = +2.0\,\text{V}$, $V_{\text{B}} = -4.0\,\text{V}$, $V_{\text{C}} = +3.3\,\text{V}$.[8]

(ii) $V_{\text{A}} = +1.0\,\text{V}$, $V_{\text{B}} = -2.0\,\text{V}$, $V_{\text{C}} = +5.0\,\text{V}$.

For each of these two scenarios (i, ii): what do you **expect** for V_{out}? What do you **measure** for V_{out}? (Isn't this a fun way to do arithmetic!)

(c) Of course, it is generally more useful to use op-amp summing circuits to add time-varying signals, since it is a bit overkill as just a calculator. We can use the two Wavegen channels to play with adding two "coherent" (i.e. synchronized) time-domain signals using the op-amp summing circuit.

First, make sure your WaveGen is operating in "Synchronized" mode. Connect Ch. 1 and Ch. 2 of your Wavegen to the 15 kΩ input resistors of V_B (CH 1) and V_C (CH 2). Disconnect V_A. Drive both Wavegen channels with a 0.1 V amplitude, 1 kHz sine wave, and play with the "Phase" to vary the time delay between the two sine waves.

Tune the relative phase between the two input signals V_B and V_C: can you find a phase that leads to destructive interference, such that $V_{\text{out}}(t) = 0$? At what phase do you see destructive interference between the two signals, and is it what you expect? How about constructive interference: at what phase do the two signals combine constructively such that the peak output signal is the sum of two equal sine waves, reaching a maximum of $V_{\text{out}} = 0.2\,\text{V}$?

[8] Don't forget about your adjustable positive and negative power supplies!